LSD – Lab B

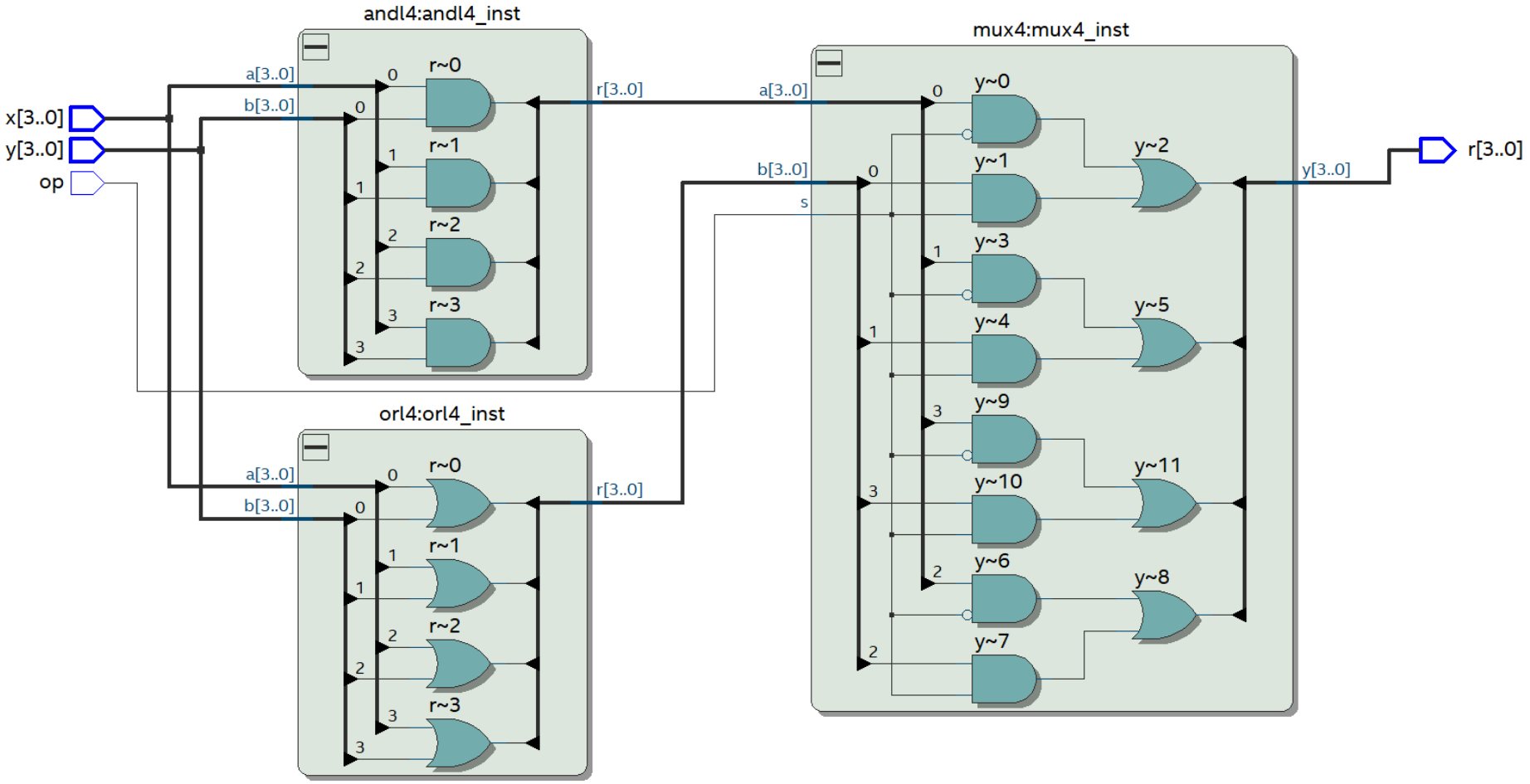
andl4:andl4_inst
a[3..0]
b[3..0]
r[3..0]
r~0
r~1
r~2
r~3
x[3..0]
y[3..0]
op
orl4:orl4_inst
a[3..0]
b[3..0]
r[3..0]
r~0
r~1
r~2
r~3
mux4:mux4_inst
a[3..0]
b[3..0]
s
y[3..0]
y~0
y~1
y~3
y~4
y~9
y~10
y~6
y~7
y~2
y~5
y~11
y~8
r[3..0]

```
1   library ieee;
2   use ieee.std_logic_1164.all;
3
4   -- definição da unidade
5   entity and14 is
6       generic( DATA_WIDTH : natural := 4 ); -- variavel usada para definir a largura dos buses da unidade
7       port
8       (
9           a      : in std_logic_vector((DATA_WIDTH-1) downto 0);
10          b      : in std_logic_vector((DATA_WIDTH-1) downto 0);
11          r      : out std_logic_vector((DATA_WIDTH-1) downto 0)
12      );
13
14  end entity;
15
16  architecture rtl of and14 is
17  begin
18
19      r <= a and b;  -- operação lógica realizada sobre todos os bits dos buses a e b
20
21  end rtl;
22
```

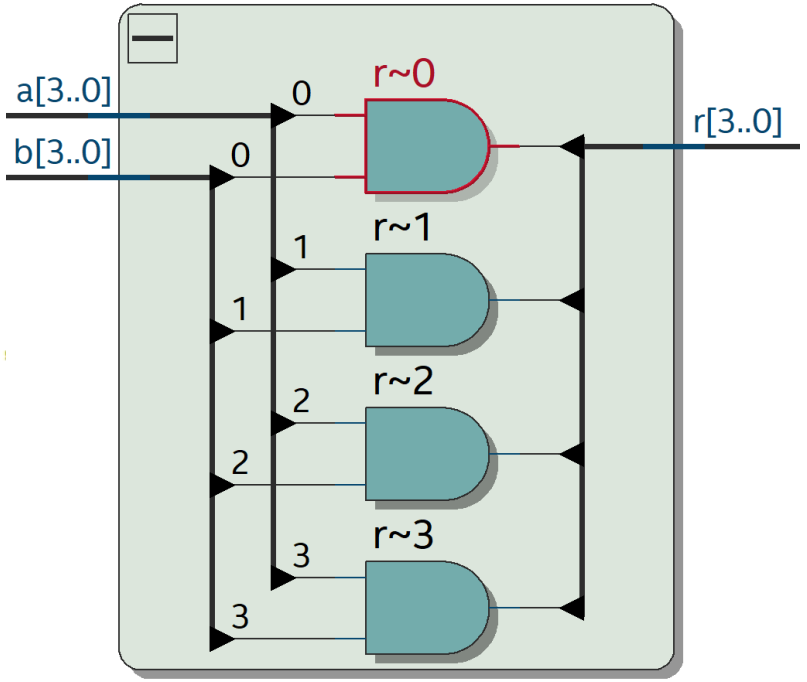


```
1   library ieee;
2   use ieee.std_logic_1164.all;
3
4   entity or14 is
5       generic( DATA_WIDTH : natural := 4 );
6       port
7       (
8           a      : in std_logic_vector((DATA_WIDTH-1) downto 0);
9           b      : in std_logic_vector((DATA_WIDTH-1) downto 0);
10          r      : out std_logic_vector((DATA_WIDTH-1) downto 0)
11      );
12
13  end entity;
14
15  architecture rtl of or14 is
16  begin
17
18      r <= a or b;
19
20  end rtl;
21
```

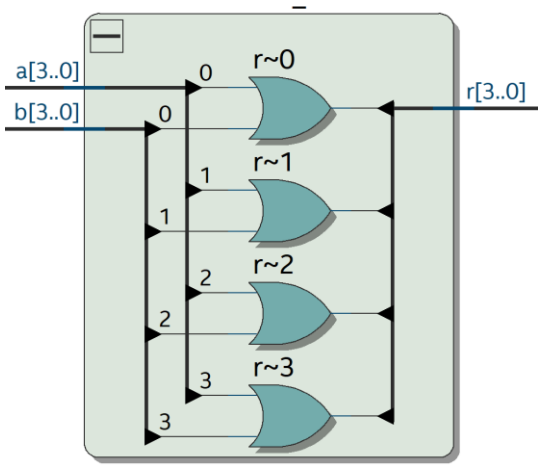

```vhdl
library ieee;
use ieee.std_logic_1164.all;

-- definição da unidade
entity mux4 is
   generic( DATA_WIDTH : natural := 4 );
   port
   (
      a     : in std_logic_vector((DATA_WIDTH-1) downto 0);
      b     : in std_logic_vector((DATA_WIDTH-1) downto 0);
      s     : in std_logic;
      y     : out std_logic_vector((DATA_WIDTH-1) downto 0)
   );
end entity;

architecture rtl of mux4 is
begin

-- primitivas lógicas:
   y(0) <= (a(0) and not s) or (b(0) and s);
   y(1) <= (a(1) and not s) or (b(1) and s);
   y(2) <= (a(2) and not s) or (b(2) and s);
   y(3) <= (a(3) and not s) or (b(3) and s);


-- alternativas:
-- bus1:
-- y <= (a and (s & s & s & s)) or (b and (s & s & s & s));
--
-- bus generico:
--    y <= (a and ((DATA_WIDTH-1) downto 0 => s)) or (b and ((DATA_WIDTH-1) downto 0 => s));
--
-- for-generate:
--    generate_mux: for i in 0 to (DATA_WIDTH-1) generate
--       y(i) <= (a(i) and not s) or (b(i) and s);
--    end generate;
--
-- vhdl "comportamental":
--    y <= a when (s = '1') else  b;

end rtl;
```

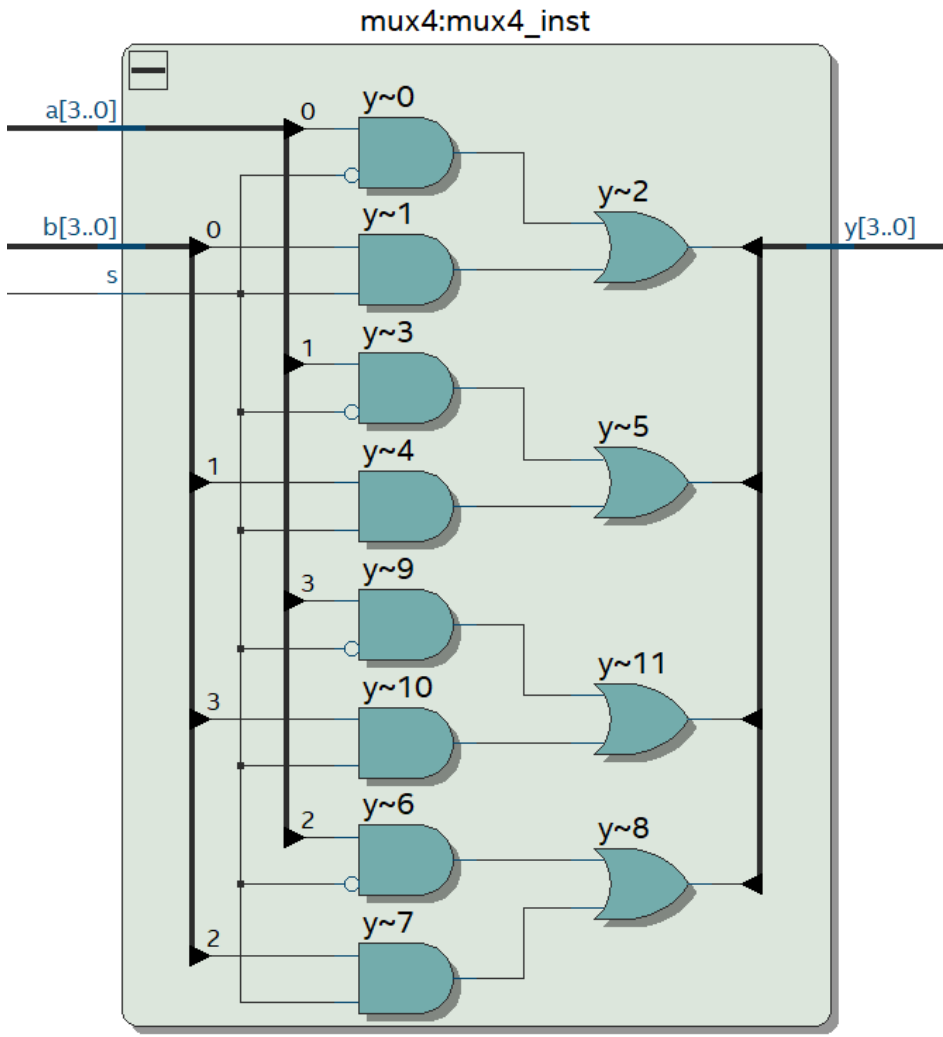

```
1   library ieee;
2   use ieee.std_logic_1164.all;
3
4   -- entradas e saídas da unidade
5   entity LUcirc is
6       generic
7       ( DATA_WIDTH : natural := 4 );
8       port
9       (
10          x      : in std_logic_vector((DATA_WIDTH-1) downto 0);
11          y      : in std_logic_vector((DATA_WIDTH-1) downto 0);  -- bus
12          op     : in std_logic;                                  -- bit
13          r      : out std_logic_vector((DATA_WIDTH-1) downto 0)
14      );
15
16  end entity;
17
18  architecture rtl of LUcirc is
19
20  -- declaração dos componentes usados
21  component and14
22      generic ( DATA_WIDTH : natural := 4 );
23      port
24      (
25          a      : in std_logic_vector((DATA_WIDTH-1) downto 0);
26          b      : in std_logic_vector((DATA_WIDTH-1) downto 0);
27          r      : out std_logic_vector((DATA_WIDTH-1) downto 0)
28      );
29  end component;
30
31  component orl4
32      generic( DATA_WIDTH : natural := 4 );
33      port
34      (
35          a      : in std_logic_vector((DATA_WIDTH-1) downto 0);
36          b      : in std_logic_vector((DATA_WIDTH-1) downto 0);
37          r      : out std_logic_vector((DATA_WIDTH-1) downto 0)
38      );
39  end component;
40
41  component mux4
42      generic( DATA_WIDTH : natural := 4 );
43      port
44      (
45          a      : in std_logic_vector((DATA_WIDTH-1) downto 0);
46          b      : in std_logic_vector((DATA_WIDTH-1) downto 0);
47          s      : in std_logic;
48          y      : out std_logic_vector((DATA_WIDTH-1) downto 0)
49      );
50  end component;
51
```

Define a interface da unidade top – como é ligada

Tem de ser igual ao definido na unidade

Os sinais internos são declarados aqui

```
51
52  -- sinais internos
53  signal and14_r : std_logic_vector((DATA_WIDTH-1) downto 0);
54  signal orl4_r : std_logic_vector((DATA_WIDTH-1) downto 0);
55
56
57  begin
58
59  -- (...)
60
61  -- instancia/utilização da unidade and14
62  and14_inst : and14
63      generic map( DATA_WIDTH => DATA_WIDTH )    -- parametro da unidade
64      port map
65      (
66          a => x,          -- ligação dos pinos de Entrada/Saída
67          b => y,
68          r => and14_r
69      );
70
71  -- instancia/utilização da unidade and14
72  orl4_inst : orl4
73      generic map
74      (
75          DATA_WIDTH => DATA_WIDTH
76      )
77      port map
78      (
79          a => x,
80          b => y,
81          r => orl4_r
82      );
83
84  -- multiplexer
85
86  -- instancia/utilização da unidade and14
87  mux4_inst : mux4
88      generic map
89      (
90          DATA_WIDTH => 4
91      )
92      port map
93      (
94          a => and14_r,
95          b => orl4_r,
96          s => op,
97          y => r
98      );
99
100 end rtl;
```

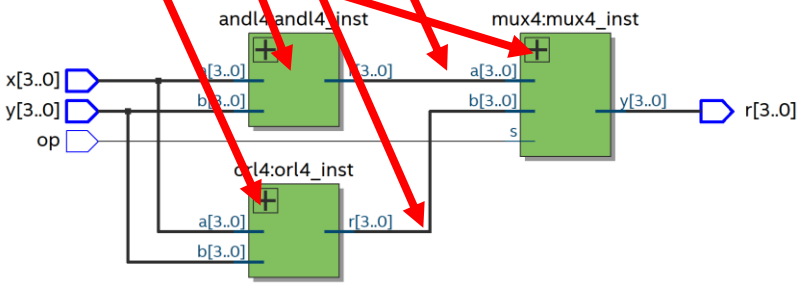

Quartus Prime Standard Edition - X:/labb - labb

File Edit View Project Assignments Processing Tools Window Help

Verificar erros sintaxe VHDL

Templates VHDL

Project Navigator — Files

- Files
  - /andl4.vhd
  - /labb_tb.vhd
  - /LUcirc.vhd
  - /orl4.vhd

Set as Top-Level Entity Ctrl+Shift+V

Task

- Compile Design
  - Analysis & Synthesis
    - Edit Settings
    - View Report
    - Analysis & Elaboration
    - Partition Merge
    - Netlist Viewers
      - RTL Viewer
      - State Machine Viewer
      - Technology Map Viewer (Post-Ma
    - Design Assistant (Post-Mapping)
    - I/O Assignment Analysis
    - Fitter (Place & Route)

/labb_tb.vhd | X:/and4.vhd | X:/orl4.vhd | Compilation Report - labb | /LUcirc.vhd | /andl4.vhd

```
1  library ieee;
2  use ieee.std_logic_1164.all;
3
4  -- definição da unidade
5  entity andl4 is
6     generic( DATA_WIDTH : natural := 4 ); -- variavel usada para definir a largura dos buses da unidade
     port
     (
        a      : in std_logic_vector((DATA_WIDTH-1) downto 0);
        b      : in std_logic_vector((DATA_WIDTH-1) downto 0);
11      r      : out std_logic_vector((DATA_WIDTH-1) downto 0)
12    );
13
14 end entity;
15
16 architecture rtl of andl4 is
17 begin
18
19    r <= a and b;  -- operação lógica realizada sobre todos os bits dos buses a e b, resultado em r (saída
20
21 end rtl;
22
```

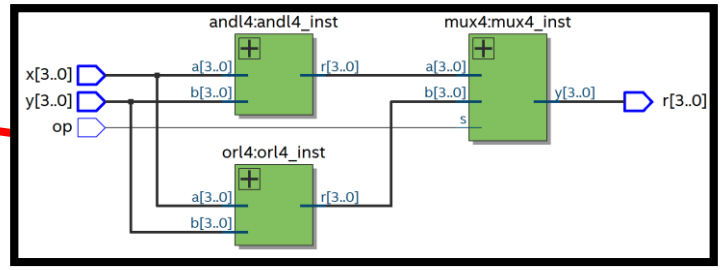

Messages: All | <<Filter>> | Find... | Find Next

Type	ID	Message
		Quartus Prime Analysis & Elaboration was successful. 0 errors, 1 warning

System (8) | Processing (13)

100% 00:00:09

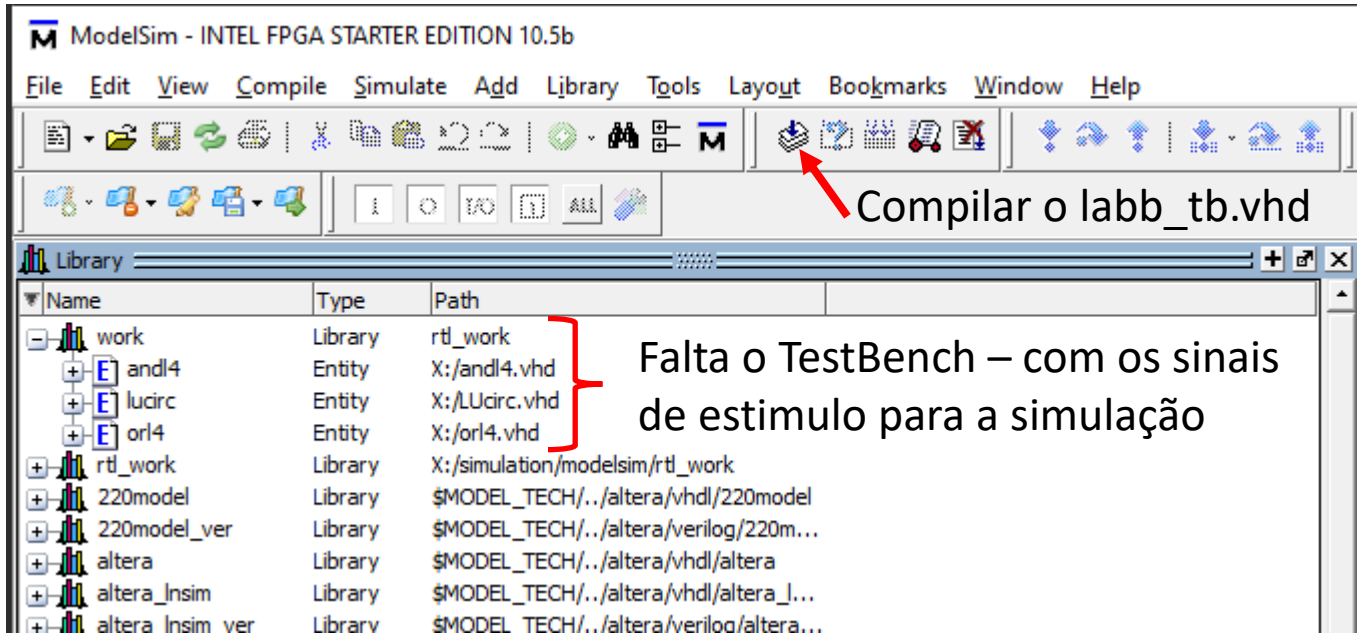
ModelSim - INTEL FPGA STARTER EDITION 10.5b
File Edit View Compile Simulate Add Library Tools Layout Bookmarks Window Help
Compilar o labb_tb.vhd
Library
Name Type Path
work Library rtl_work
andl4 Entity X:/andl4.vhd
lucirc Entity X:/LUcirc.vhd
orl4 Entity X:/orl4.vhd
rtl_work Library X:/simulation/modelsim/rtl_work
220model Library $MODEL_TECH/../altera/vhdl/220model
220model_ver Library $MODEL_TECH/../altera/verilog/220m...
altera Library $MODEL_TECH/../altera/vhdl/altera
altera_lnsim Library $MODEL_TECH/../altera/vhdl/altera_l...
altera_lnsim_ver Library $MODEL_TECH/../altera/verilog/altera...
Falta o TestBench – com os sinais de estimulo para a simulação

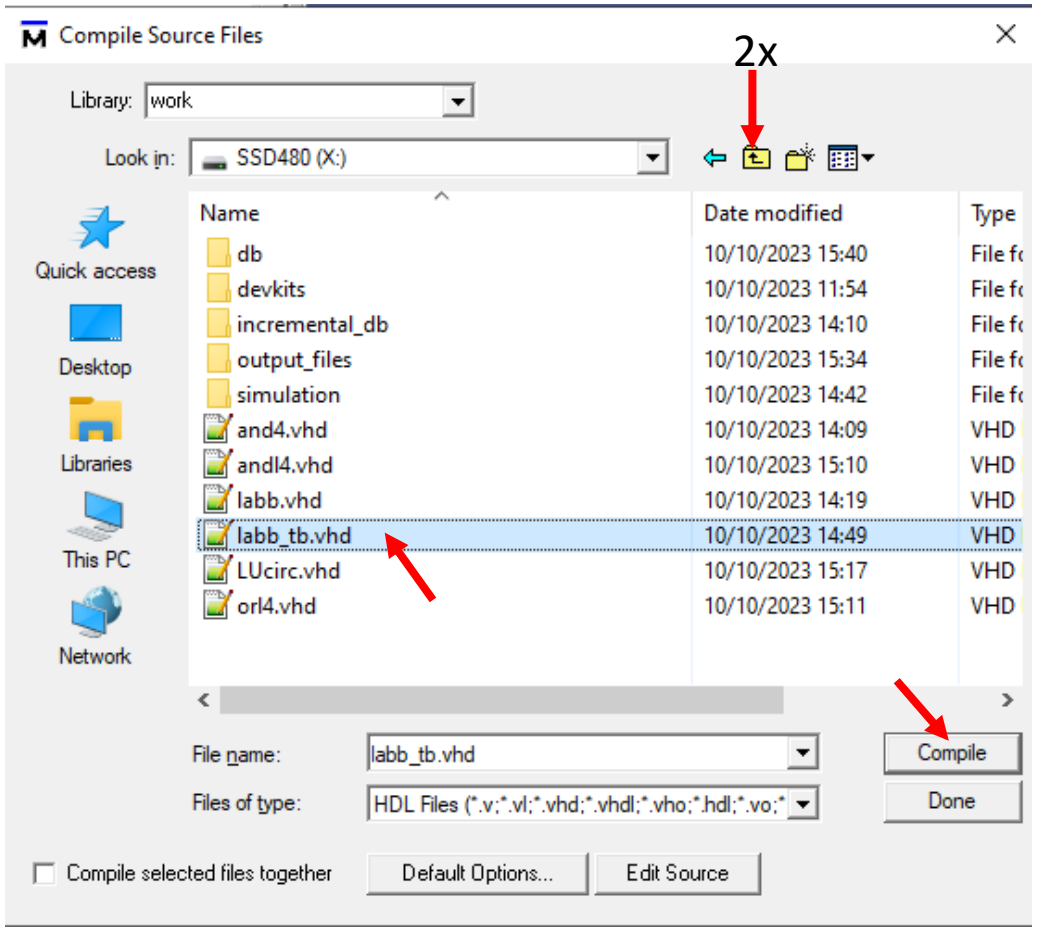
Compile Source Files
2x
Library: work
Look in: SSD480 (X:)
Quick access
Desktop
Libraries
This PC
Network
Name Date modified Type
db 10/10/2023 15:40 File fo
devkits 10/10/2023 11:54 File fo
incremental_db 10/10/2023 14:10 File fo
output_files 10/10/2023 15:34 File fo
simulation 10/10/2023 14:42 File fo
and4.vhd 10/10/2023 14:09 VHD
andl4.vhd 10/10/2023 15:10 VHD
labb.vhd 10/10/2023 14:19 VHD
labb_tb.vhd 10/10/2023 14:49 VHD
LUcirc.vhd 10/10/2023 15:17 VHD
orl4.vhd 10/10/2023 15:11 VHD
File name: labb_tb.vhd
Files of type: HDL Files (*.v;*.vl;*.vhd;*.vhdl;*.vho;*.hdl;*.vo;*
Compile
Done
Compile selected files together
Default Options...
Edit Source

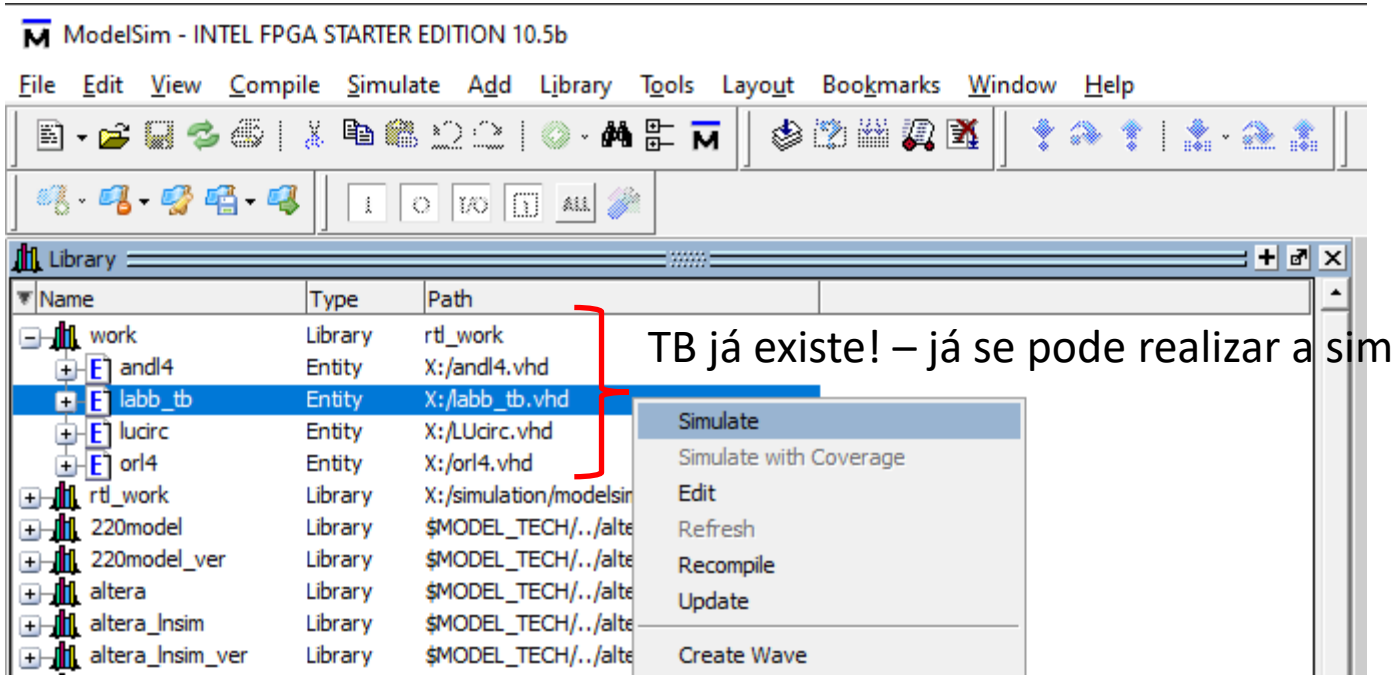
ModelSim - INTEL FPGA STARTER EDITION 10.5b
File Edit View Compile Simulate Add Library Tools Layout Bookmarks Window Help
Library
Name Type Path
work Library rtl_work
andl4 Entity X:/andl4.vhd
labb_tb Entity X:/labb_tb.vhd
lucirc Entity X:/LUcirc.vhd
orl4 Entity X:/orl4.vhd
rtl_work Library X:/simulation/modelsim
220model Library $MODEL_TECH/../alte
220model_ver Library $MODEL_TECH/../alte
altera Library $MODEL_TECH/../alte
altera_lnsim Library $MODEL_TECH/../alte
altera_lnsim_ver Library $MODEL_TECH/../alte
Simulate
Simulate with Coverage
Edit
Refresh
Recompile
Update
Create Wave
TB já existe! – já se pode realizar a simulação

3. Tempo Simulação

4. Correr Simulação

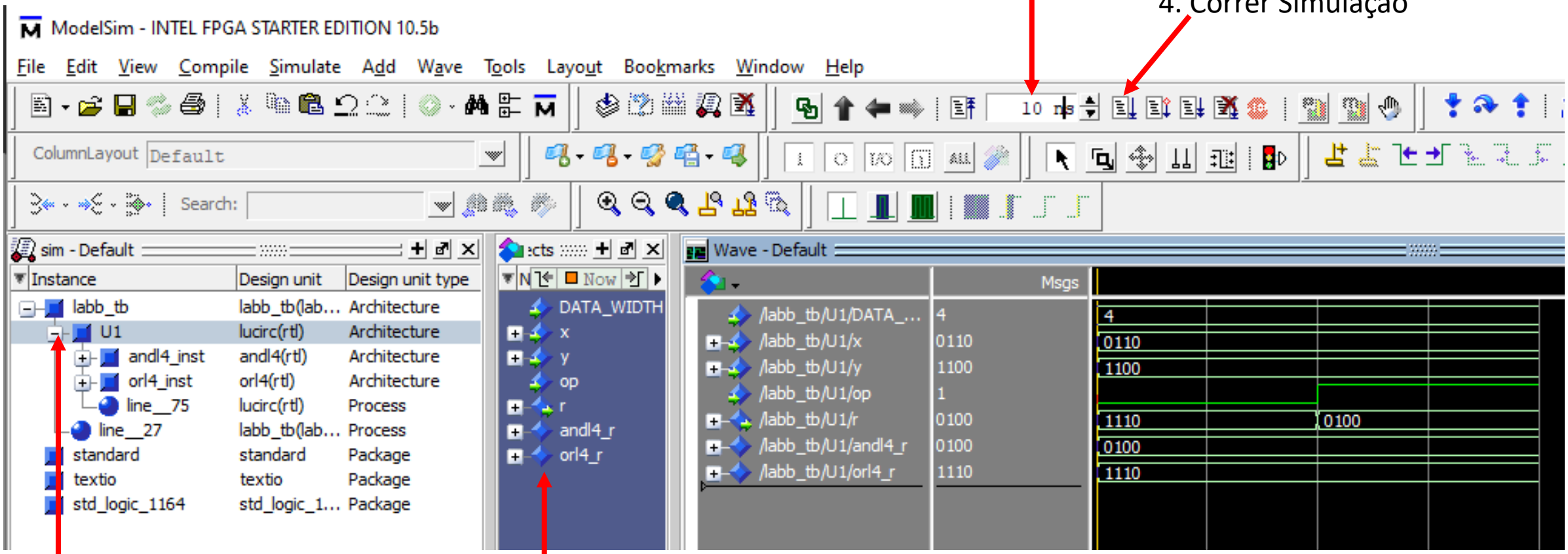

1. Escolher unidade

2. Escolher sinais

Placa FPGA

Importar QSF com Correspondência pino-sinal

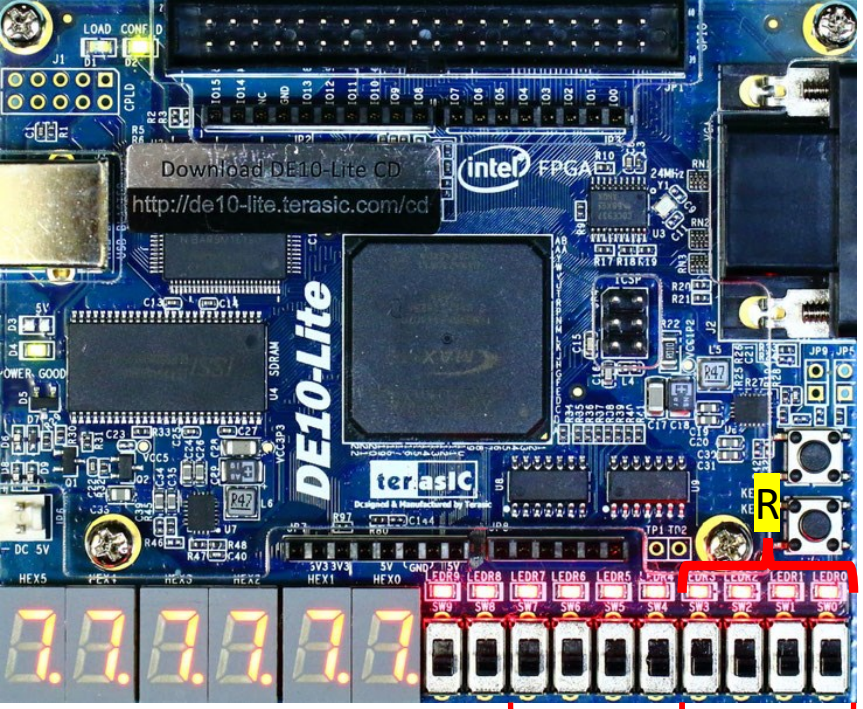

Op?

Op?

B

A

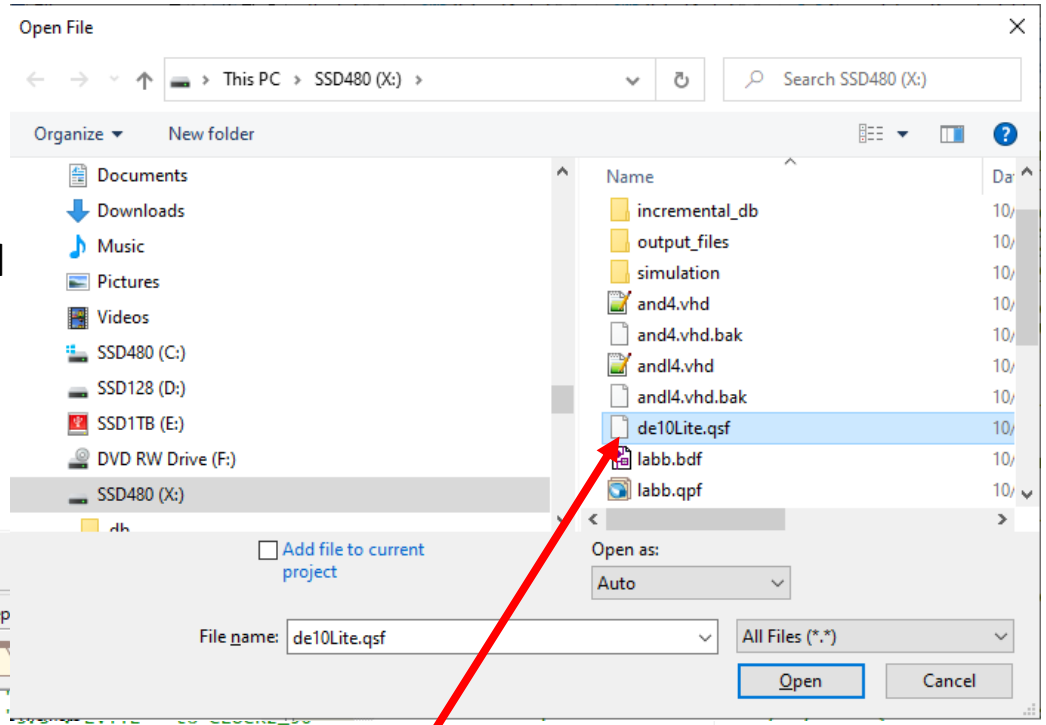

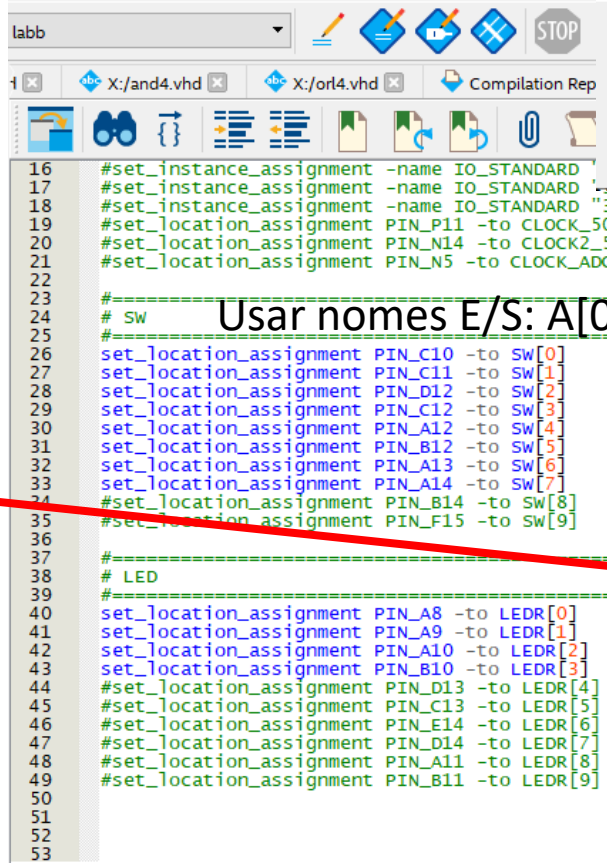

Usar nomes E/S: A[0],...

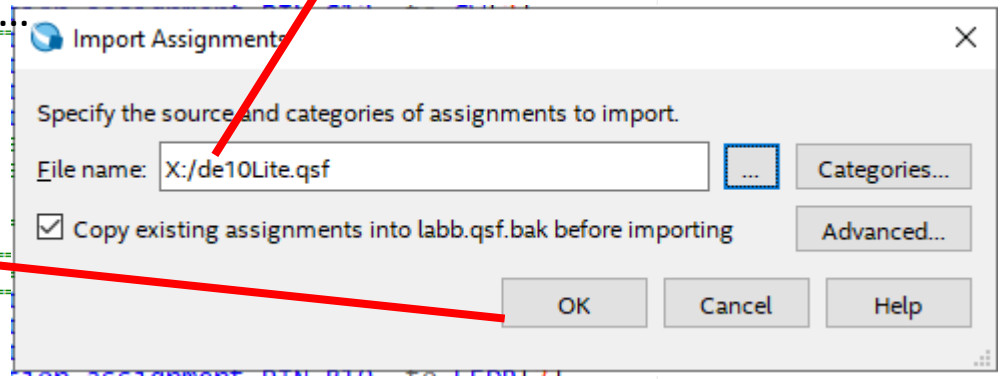

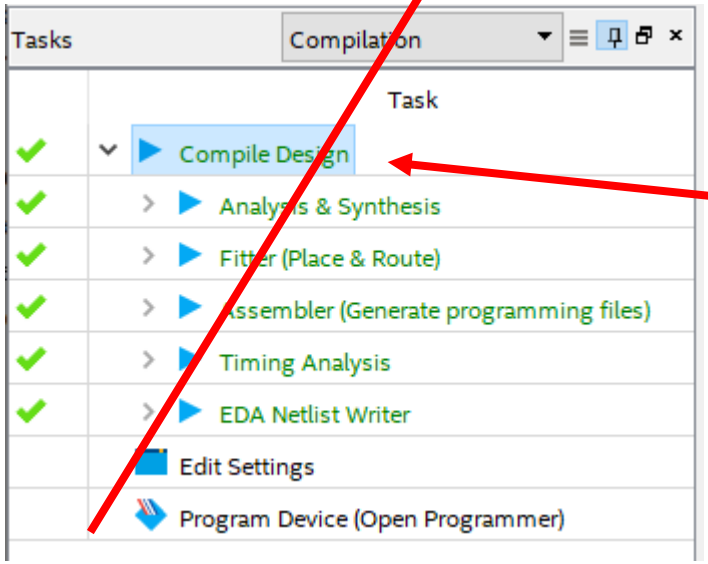

Op	B3	B2	B1	B0	A3	A2	A1	A0	R3	R2	R1	R0
0	0	1	1	0	1	1	0	0				
1	0	1	1	0	1	1	0	0				

Op	B3	B2	B1	B0	A3	A2	A1	A0	R3	R2	R1	R0